XMP ci

Process Pressure Transmitter with HART®-communication

Ceramic Sensor

accuracy according to IEC 60770: 0.2 % FSO

Process Pressure Transmitter

XMP ci

Nominal pressure:

from 0 ... 60 mbar
up to 0... 20 bar

Output signals:

2-wire: 4 ... 20 mA
others on request

Special characteristics:

- turn-down 1:10
- two chamber aluminium die cast case or stainless field housing
- internal or flush mounted capacitive ceramic sensor
- HART®-communication
- IS-version:
  Ex ia = intrinsically safe version
- diaphragm Al_2O_3 99.9 %

Optional versions

- IS-version:
  Ex d = flameproof enclosure
- with integrated display and operating module
- several process connections (thread, flange, DRD etc.)

The process pressure transmitter XMP ci measures the pressure of gases, steam, dust and fluids. The special-developed capacitive ceramic sensor for this transmitter has a high overpressure capability and excellent media stability.

Several process connections e.g. thread or flange are available.

The transmitter is as a standard equipped with HART®-communication, the customer can choose between a two chamber aluminum die cast case or a stainless field housing.

Preferred areas of use are

Oil and gas industry

Chemical and petrochemical industry

Preferred using in

Fuel and Oil

aggressive Media

BD SENSORS GmbH
BD-Sensors-Straße 1
D - 95199 Thierstein

Tel: +49 (0) 92 35 / 98 11- 0
Fax: +49 (0) 92 35 / 98 11- 11

www.bdsensors.com
info@bdsensors.de

Pressure ranges [1]									
Nominal pressure gauge	[bar]	0.06	0.16	0.4	1	2	5	10	20
Overpressure	[bar]	2	4	6	8	15	25	35	45
Permissible vacuum	[bar]	-0.2	-0.3	-0.5		-1			
[1] On customer request we adjust the devices by software to the required pressure ranges. Within the turn-down-possibility (starting at 0.02 bar).									

Output signal / Supply		
Standard	2-wire: 4 ... 20 mA intrinsically safe version with HART®-communication / V_S = 10 ... 28 V_{DC}	
Current consumption	max. 25 mA	
Performance		
Accuracy [2]	for nominal pressure ranges: from 0.06 bar up to 0.4 bar	turn-down < 1:5: ± (0.2 + (TD-1) x 0.02) % FSO turn-down > 1:5: ± (0.2 + (TD-1) x 0.04) % FSO
	for nominal pressure ranges: from 1 bar up to 20 bar	turn-down < 1:10: ± (0.2 + (TD-1) x 0.01) % FSO turn-down > 1:10: ± (0.2 + (TD-1) x 0.02) % FSO
	with turn-down = nominal pressure range / adjusted range	
Permissible load	$R_{max} \leq [(V_S - V_{S\,min}) / 0.02\ A]\ \Omega$	load during HART®-communication: R_{min} = 250 Ω
Influence effects	supply: 0.05 % FSO / 10 V	permissible load: 0.05 % FSO / kΩ
Long term stability	≤ ± 0.1 % FSO / year	
Response time	200 msec – without consideration of electronic damping	measuring rate 5/sec
Adjustability	electronic damping: 0 ... 100 sec offset 0 ... 80 % FSO turn-down of span: max. 1:10 (span min. 0.02 bar)	
[2] accuracy according to IEC 60770 – limit point adjustment (non-linearity, hysteresis, repeatability)		
Thermal errors / Permissible temperatures		
Thermal error	≤ ± (0.02 x turn-down) % FSO / 10 K in compensated range -20 ... 80 °C	
Permissible temperatures	without display: medium: -25 ... 125 °C environment: -40 ... 70 °C storage: -40 ... 80° C with diplay: medium: -25 ... 125 °C environment: -20 ... 70 °C storage: -30 ... 80° C	
Electrical protection		
Short-circuit protection	permanent	
Reverse polarity protection	no damage, but also no function	
Electromagnetic compatibility	emission and immunity according to EN 61326	
Mechanical stability		
Vibration	5 g RMS (20 ... 2000 Hz)	
Shock	100 g / 11 msec	
Materials		
Pressure port	standard: stainless steel 1.4404 (316L) optionally for G1 1/2" flush (DIN 3852): PVDF	
Housing	aluminium die cast, powder-coated or stainless steel 1.4404 (316L)	
Cable gland	brass, nickel plated	
Viewing glass	laminated safety glass	
Seals (media wetted)	FKM (permissible temperature: -25 ... 125 °C) EPDM (permissible temperature: -40 ... 125 °C) others on request	
Diaphragm	ceramics Al_2O_3 99.9 %	
Media wetted parts	pressure port, seals, diaphragm	
Explosion protection		
Standard: intrinsically safe version	aluminium die cast case: with stainless steel pressure port: zone 0: II 1 G EEx ia IIB T4 with PVDF pressure port: zone 0/1 [3]: II 1/2 G EEx ia IIB T4 stainless steel field housing: with stainless steel pressure port: zone 0: II 1 G EEx ia IIC T4 with PVDF pressure port: zone 0/1 [3]: II 1/2 G EEx ia IIC T4	
Option: flameproof enclosure	in preparation	
Safety techn. maximum values	U_i = 28 V, I_i = 93 mA, P_i = 660 mW	
Permissible temperatures for environment	in zone 0: -20 ... 60 °C with p_{atm} 0.8 bar up to 1.1 bar in zone 1: -20 ... 70° C	
[3] The designation depends on the nominal pressure range. Nominal pressure ranges ≤ 60 mbar are marked with „2G". For nominal pressure ranges > 60 mbar and < 10 bar see note under item 17 in the EC type-examination certificate!		

Miscellaneous	
Display (optionally)	LC-display, visible range 32.5 x 22.5 mm; 5-digit 7-segment main display, digit height 8 mm, range of indication ±9999; 8-digit 14-segment additional display, digit height 5 mm; 52-segement bargraph; accuracy 0.1% ± 1 digit
Ingress protection	IP 67
Installation position	any
Weight	min. 400 g (depending on housing and mechanical connection)
Operational life	> 100 x 10^6 pressure cycles
CE-conformity	EMC Directive: 2004/108/EC

Wiring diagram

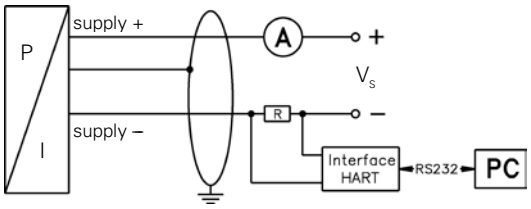

Pin configuration

Electrical connections	**aluminium die cast case:** terminal clamps (clamp section: 2.5 mm²)	**stainless steel field housing:** terminal clamps (clamp section: 1.5 mm²)
Supply + Supply – Test	IN+ IN- Test	IN+ IN- -
Shield	⏚	⏚

Housing designs [4] **(dimensions in mm)**

aluminium die cast case with display

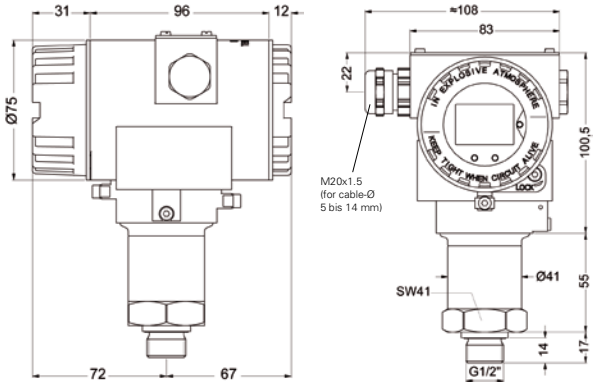

G1/2" DIN 3852

stainless steel field housing with display

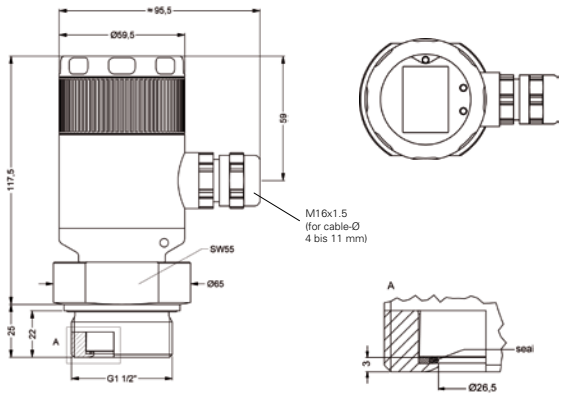

G1 1/2" flush DIN 3852

aluminium die cast case with display

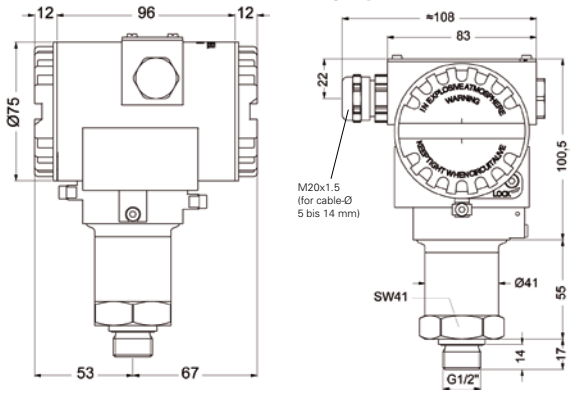

G1/2" DIN 3852

stainless steel field housing with display

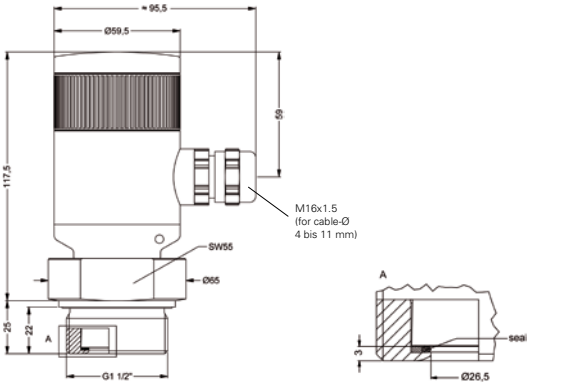

G1 1/2" flush DIN 3852

[4] *aluminium die cast case is horizontally rotatable as standard*

Standard pressure ports (dimensions in mm)

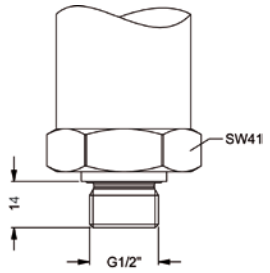

G1/2" DIN 3852

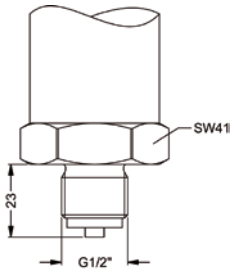

G1/2" EN 837

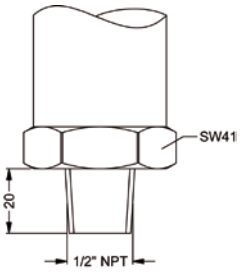

1/2" NPT

Process connections (dimensions in mm)

Inch thread

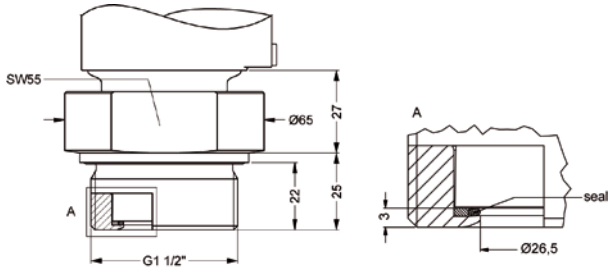

G1 1/2" flush DIN 3852

DRD [5]

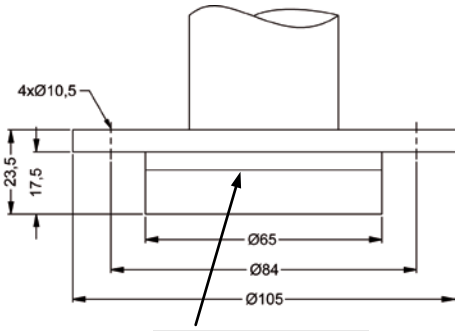

flush diaphragm Ø26,5

Flange [6] (DIN 2501)

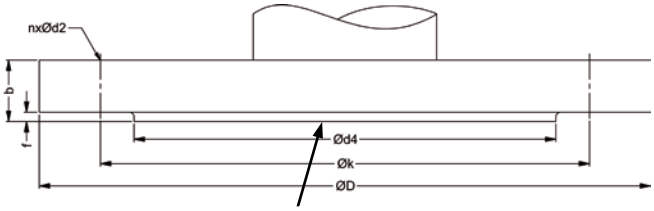

flush diaphragm Ø26,5

Flange [6] (ANSI)

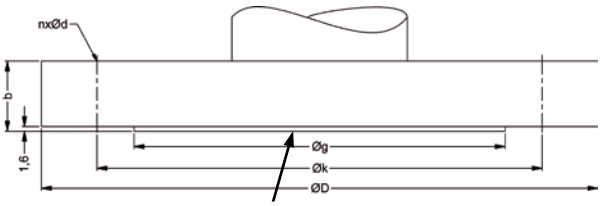

flush diaphragm Ø26,5

dimensions in mm			
size	DN25/PN40	DN50/PN40	DN80/PN16
D	115	165	200
k	85	125	160
d4	68	102	138
b	18	20	20
f	2	3	3
n	4	4	8
d2	14	18	18

dimensions in mm		
size	2"/150 lbs	3"/150 lbs
D	152.4	190.5
g	91.9	127
k	120.7	152.4
b	19.1	23.9
n	4	4
d	19.1	19.1

[5] mounting flange is included in the delivery (already pre-assembled)
[6] DN80/PN16, 2"/150 lbs and 3"/150 lbs only possible for nominal pressure ranges $P_N \leq 7$ bar
HART® is a registered trade mark of HART Communication Foundation;
Windows® is a registered trade mark of Microsoft Corporation

Tel: +49 (0) 92 35 / 98 11- 0
Fax: +49 (0) 92 35 / 98 11- 11
www.bdsensors.com
info@bdsensors.de

Fax: +49 (0) 92 35 / 98 11 -11

BD | SENSORS® pressure measurement

Ordering code XMP ci

XMP ci ☐☐☐-☐☐☐☐-☐☐-☐-☐-☐☐☐-☐☐☐-☐-☐-☐-☐☐☐

Pressure																													
gauge	5	1	E																										
Input ⚠ [bar]																													
0.06				0	6	0	0																						
0.16				1	6	0	0																						
0.4				4	0	0	0																						
1				1	0	0	1																						
2				2	0	0	1																						
5				5	0	0	1																						
10				1	0	0	2																						
20				2	0	0	2																						
customer				9	9	9	9																						consult
Design																													
Aluminium die cast case																													
with display								A	0																				
without display								A	N																				
Stainless steel field housing																													
with display								F	V																				
without display								F	N																				
customer								9	9																				consult
Output																													
Intrinsic safety 4 ... 20 mA / 2-wire with HART®-communication										I																			
customer										9																			consult
Accuracy																													
0.2 %												B																	
customer												9																	consult
Electrical connection																													
terminal clamp														A	K	0													
customer														9	9	9													consult
Mechanical connection																													
standard pressure connections:																													
G1/2" DIN 3852																	1	0	0										
G1/2" EN 837																	2	0	0										
1/2" NPT																	N	0	0										
process connections:																													
G 1 1/2" DIN flush (DIN 3852)																	M	0	0										
Flange DN 25 / PN 40 (DIN 2501)																	F	2	0										
Flange DN 50 / PN 40 (DIN 2501)																	F	2	3										
Flange DN 80 / PN 16 (DIN 2501) [1]																	F	1	4										
Flansch DN 2" / 150 lbs (ANSI B16.5) [1]																	F	3	2										
Flansch DN 3" / 150 lbs (ANSI B16.5) [1]																	F	3	3										
DRD Ø 65 mm [2]																	D	R	D										
customer																	9	9	9										consult
Diaphragm																													
Ceramics Al_2O_3 99,9%																				C									
customer																				9									consult
Seals																													
FKM																						1							
EPDM																						3							
customer																						9							consult
Pressure port																													
standard:																													
Stainless steel 1.4404 (316L)																							1						
option for G 1 1/2" flush:																													
PVDF																							B						
customer																							9						consult
Special version																													
standard																									0	0	0		
customer																									9	9	9		consult

⚠ **if setting range shall be different from nominal range please specify in your order**

[1] DN80/PN16, 2"/150 lbs and 3"/150 lbs only possible for nominal pressure ranges $P_N \leq 7$ bar

[2] mounting flange is included in the delivery (already pre-assembled)

HART® is a registered trade mark of HART Communication Foundation; Varivent® is a brand name of GEA Tuchenhagen GmbH

This price list contains product specification; properties are not guaranteed. Detailed information about options are defined in the datasheet. Subject to change without notice.

BD SENSORS GmbH
BD-Sensors-Straße 1
D - 95199 Thierstein
Telefon +49 (0) 92 35 / 98 11- 0
Telefax +49 (0) 92 35 / 98 11- 11
www.bdsensors.com
info@bdsensors.de