EPLA

LINEAR POTENTIOMETER

ISO 9001:2000

Main characteristics

EPLA is an absolute linear potentiometer assuring great reliability even in tough applications with heavy vibrations and shocks. The groove on the enclosure of the transducer represents an excellent alternative to the usual system of fastening with brackets. Installation is also made simpler by the absence of variations on the electrical output signal outside of the theoretical electrical stroke. EPLA represents a great solution in most machinery for material processing such as injection presses for plastic, rubber and so on. This transducer is also suitable for being used in explosive environment or in presence of gas or inflammable powders.

Ordering Code

EPLA 200 X 5 C5 A

Model of linear potentiometer EPLA

Stroke (mm)
50/100/150/200/300
350/400/450/500
N.B.: Please contact our offices for versions and range availability

Protection class
standard IP60 X
optional IP65 S

Displacement speed
5 max speed 5 m/s

Output type
P standard cable length 1 m
C3 3 contacts round connector (IP40)
C4 4 contacts round connector (IP65)
C5 5 contacts round connector (IP40)

Output position
A axial

EPLB

CYLINDRICAL LINEAR POTENTIOMETER

ISO 9001:2000

Main characteristics

EPLB is an absolute linear potentiometer transducer. Mechanical mounting is made simpler by the presence of two spherical joints on the two sides and by the enclosure's cylindrical shape. The main characteristic is the absence of variations on the electrical output signal outside of the theoretical electrical stroke. Thanks to its robustness and precision EPLB represents a great solution in most mechanical application for automation. This transducer is also suitable for being used in explosive environment or in presence of gas or inflammable powders.

Ordering code

EPLB 200 S 5 P R

Model of linear potentiometer EPLB

Stroke (mm)
50/100/150/200/300
400/450/500
N.B.: Please contact our offices for versions and range availability

Protection class
standard IP65 S

Displacement speed
5 max speed 5 m/s

Output type
P standard cable length 1 m
C3 3 contacts round connector (IP40)
C4 4 contacts round connector (IP65)
C5 5 contacts round connector (IP40)

Output position
R radial

Mechanical dimensions

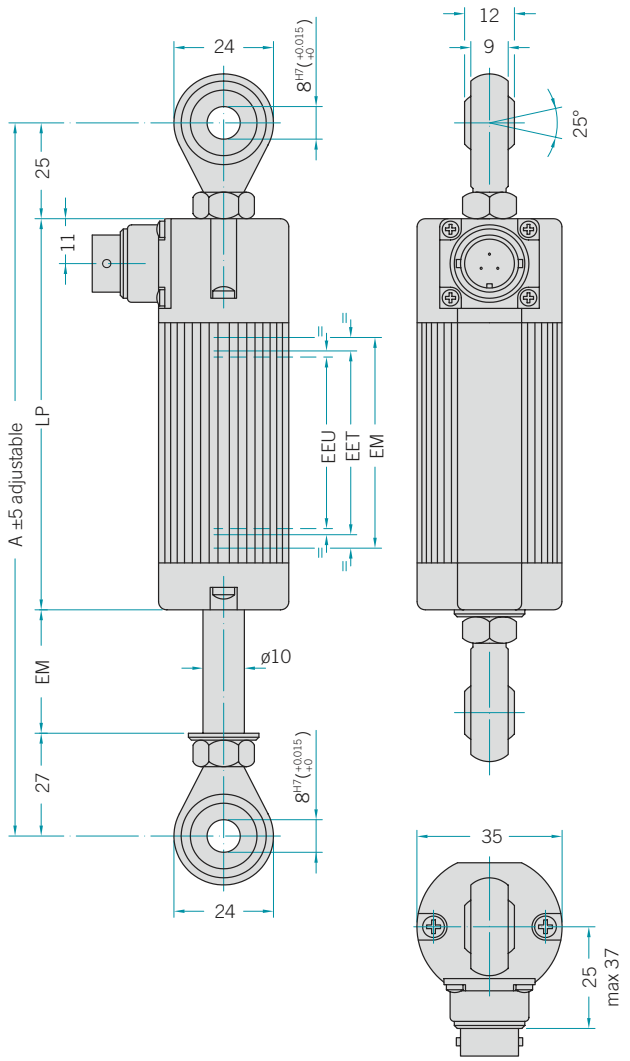

Technical characteristics

Independent linearity	±0,05%
Displacement speed	5 m/s max
Displacement force	10 N max
Moving angle	±30° max
Applicable voltage	60 V max
Electrical insulation	>100 MΩ a 500 VDC, 1 bar, 2 s
Dielectric rigidity	<100 µA a 500 VAC, 50 Hz, 1 bar, 2 s
Power dissipation	3 W, 40 °C 0 W, 120 °C
Protection class	IP65 (IP67 on request)
Explosion proof	According to ATEX CEI EN 50020 2003 (par. 5.4 a)
Life	>25x10^6 m strokes or >100x10^6 uses
Working temperature	-30÷100 °C
Storage temperature	-50÷120 °C
Thermal coefficient of the output voltage	< 1,5 ppm/°C
Vibrations	20 G, 5÷2000 Hz
Shock rating	50 G for 11 ms
Acceleration	200 m/s² max (20 G)
Resistance tolerance	±20%
Recommended cursor current	0,1 µA max
Max cursor current	10 mA max
Enclosure material	anodized aluminium Nylon 66 G 25
Rod material	stainless steel AISI 303
Mounting	2 spherical joints

Important: these data are corrected if the transducer is used as voltage divisor with a maximum applicable voltage of 0,1µA.

Electrical connections

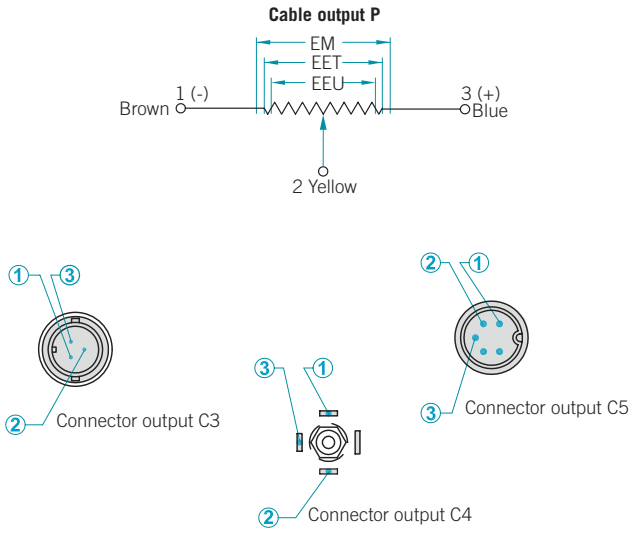

For optional accessories please refer to pg. 10

Electrical / mechanical data

Model*	50/100/150/200/300/400/450/500
Useful electric stroke (EEU) (+3/-0mm)	It corresponds to the model (mm)
Theoretical electric stroke (EET) (±1mm)	EEU+3 mm (50÷150), EEU+4 mm (200÷300),406 mm (400), 457 mm (450), 508 mm (500)
Mechanical stroke(EM)	EEU+9 mm (50÷150), EEU+10 mm (200÷300), 412 mm (400), 463 mm (450), 518 mm (500)
Resistance (on EET)	5 kΩ (50÷500)
Case length (LP)	EEU+129 mm (50÷150), EEU+130 mm (200÷300), 538 mm (400), 589 mm (450), 664 mm (500)
Minimum interaxis length (A)	EEU+181 mm (50÷150), EEU+182 mm (200÷300), 590 mm (400), 641 mm (450), 716 mm (500)

*N.B. For further versions and strokes please contact our offices

Eltra®
www.eltra.it e-mail: eltra@eltra.it
Via Monticello di Fara, 32 bis - 36040 Sarego (VI) - ITALY - Tel. +39 0444 436489 R.A. - Fax. +39 0444 835335
© Copyright 2006 Eltra S.p.a. - All right rederved: All information in this catalog is subject to change without notice - Eltra takes no responsability for typographical errors.
For the terms of sales please check the website www.eltra.it.

Mechanical dimensions

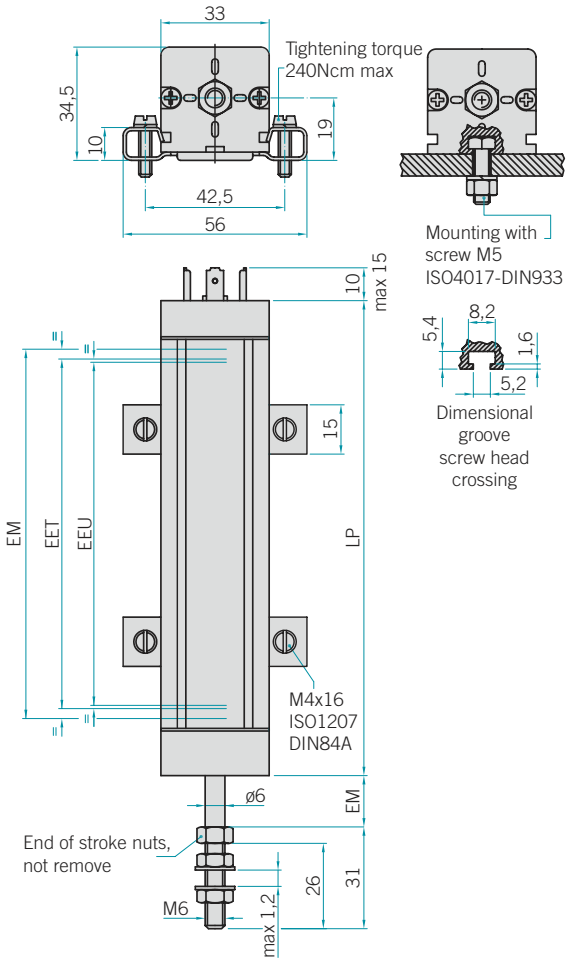

Technical characteristics

Independent linearity	±0,05%
Repeatability	0,01 mm
Displacement speed	5 m/s max
Displacement force	2 N max (IP60) 10 N max (IP65)
Applicable voltage	60 V max
Electrical insulation	100 MΩ, 500 VDC, 1 bar, 2 s
Dielectric rigidity	< 100 µA, 500 VAC, 50 Hz, 1bar, 2 s
Power dissipation	3 W, 40 °C 0 W, 120 °C
Protection class	IP60 (IP65 on request)
Explosion proof	According to ATEX CEI EN 50020 2003 (par. 5.4 a)
Life	>25x10⁶ m strokes or >100x10⁶ uses
Working temperature	-30÷100 °C
Storage temperature	-50÷120 °C
Thermal coefficient of the resistence	-200÷200 ppm/°C
Thermal coefficient of the output voltage	< 1,5 ppm/°C
Vibrations	20 G, 5÷2000 Hz
Shock rating	50 G for 11 ms
Acceleration	200 m/s² max (20 G)
Resistance tolerance	± 20%
Recommended cursor current	0,1 µA max
Max cursor current	10 mA max
Enclosure material	anodized aluminium Nylon 66 G 25
Rod material	stainless steel AISI 303
Mounting	brackets with variable interaxis or screw M5 ISO4017-DIN933

Important: these data are corrected if the transducer is used as voltage divisor with a maximum applicable voltage of 0,1µA.

Electrical connections

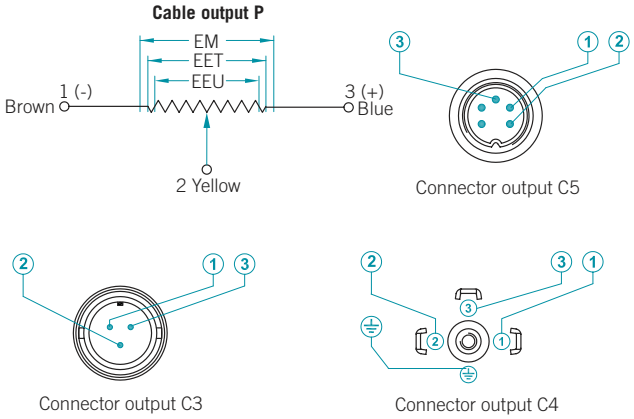

Installation warning instructions:
- Connect the transducer according to the reported connections (don't use it as a variable resistance)
- The transducer calibration has to be done setting the stroke in order to have an output signal between the 1% and 99% of the value of operating voltage.

For optional accessories please refer to pg. 10

Electrical / mechanical data

Model*	50/100/150/200/300 350/400/450/500
Useful electric stroke(EEU) (+3/-0mm)	It corresponds to the model (mm)
Theoretical electric stroke (EET) (±1mm)	EEU+3 mm (50÷150), EEU+4 mm (200÷300), 355 mm (350), 406 mm (400), 457 mm (450), 508 mm (500)
Mechanical stroke (EM)	EEU+9 mm (50÷150), EEU+10 mm (200÷300), 361 mm (350), 412 mm (400), 463 mm (450), 518 mm (500)
Resistance (on the EET)	5 kΩ (50÷500)
Case length (LP)	EEU+62 mm (50÷150), EEU+63 mm (200÷300), 414 mm (350), 465 mm (400), 516 mm (450), 571 mm (500)

*N.B. For further versions and strokes please contact our offices

Eltra®
www.eltra.it e-mail: eltra@eltra.it
Via Monticello di Fara, 32 bis - 36040 Sarego (VI) - ITALY - Tel. +39 0444 436489 R.A. - Fax. +39 0444 835335
© Copyright 2006 Eltra S.p.a. - All right rederved: All information in this catalog is subject to change without notice - Eltra takes no responsability for typographical errors.
For the terms of sales please check the website www.eltra.it.