NAMUR INDUCTIVE PROXIMITY SWITCH

M 18(with LED)		M 30		M 30(with LED)	
●	○	●	○	●	○
5 mm	8 mm	10 mm	15 mm	10 mm	15 mm
stainless steel or nickel plated brass		stainless steel or nickel plated brass		stainless steel or nickel plated brass	
●		○		●	

6-12VDC		
-		
>2.2mA(ON)	<1.1mA(OFF)	
0.2ms/0.2ms	0.5ms/0.5ms	
500HZ	300HZ	
<15%(Sr)		
-		
IP67		
-25°C - +70°C		
<2%(Sr)		
-		
-		
<10ms		
RFI>3V/m / EFT>1KV / ESD>4KV(contact)		
IEC 60947-5-2,Part 7.4.1 / IEC 60947-5-2,Part 7.4.2		
PBT		
P6C1B1805NA/LED	19	P6C2B1808NA/LED

6-12VDC		
-		
>2.2mA(OFF)	<1.1mA(ON)	
0.5ms/0.5ms	1ms/1ms	
300HZ	100HZ	
<15%(Sr)		
-		
IP67		
-25°C - +70°C		
<2%(Sr)		
-		
-		
<10ms		
RFI>3V/m / EFT>1KV / ESD>4KV(contact)		
IEC 60947-5-2,Part 7.4.1 / IEC 60947-5-2,Part 7.4.2		
PBT		
P6C1B3010NA	19	P6C2B3015NA

6-12VDC		
-		
>2.2mA(ON)	<1.1mA(OFF)	
0.5ms/0.5ms	1ms/1ms	
300HZ	100HZ	
<15%(Sr)		
-		
IP67		
-25°C - +70°C		
<2%(Sr)		
-		
-		
<10ms		
RFI>3V/m / EFT>1KV / ESD>4KV(contact)		
IEC 60947-5-2,Part 7.4.1 / IEC 60947-5-2,Part 7.4.2		
PBT		
P6C1B3010NA/LED	19	P6C2B3015NA/LED

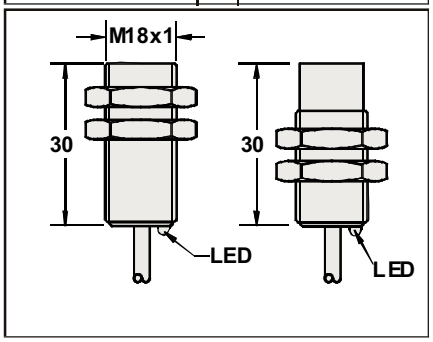

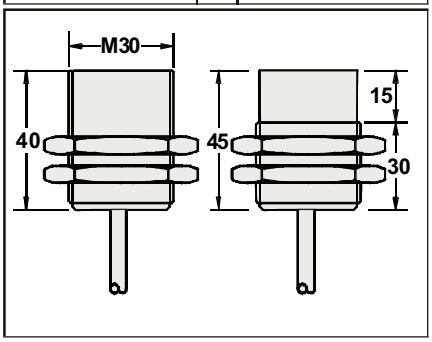

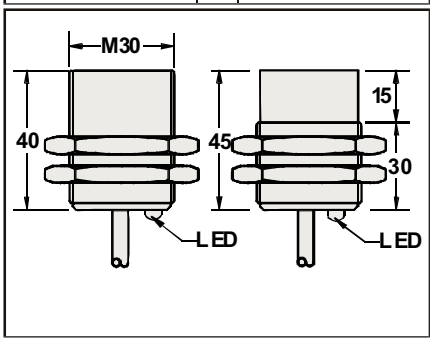

5.8ϕ2x0.5		
Approx.126 g		

5.8ϕ2x0.5	
Approx.185 g	Approx.167 g

5.8ϕ2x0.5	
Approx.185 g	Approx.167 g