DC INDUCTIVE PROXIMITY SWITCH

ϕ6.5		M 8		M 8	
●	○	●	○	●	○
3mm	6mm	1mm	2mm	1mm	2mm
Nickel plated brass		stainless steel		stainless steel	
●		●		●	

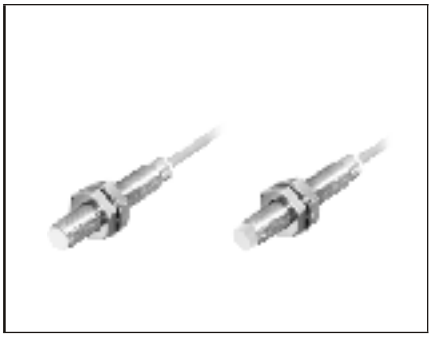

10-30VDC			10-30VDC / 5-36VDC /10-55V/ 10-60VDC			10-30VDC / 5-36VDC		
<10%			<10%			<10%		
<10mA			<10mA			<10mA		
200mA			200mA			200mA		
<0.01mA			<0.01mA			<0.01mA		
<2.0V			<1.5V			<1.5V		
1KHZ	500HZ		2KHZ			2KHZ		
0.2ms/0.2ms	0.5ms/0.5ms		0.1ms/0.1ms			0.1ms/0.1ms		
<15%(Sr)			<15%(Sr)			<15%(Sr)		
<1.0%(Sr)			<1.0%(Sr)			<1.0%(Sr)		
IP67			IP67			IP67		
-25℃ - +70℃			-25℃ - +70℃			-25℃ - +70℃		
<10%(Sr)			<10%(Sr)			<10%(Sr)		
YES			YES			YES		
220mA			220mA			220mA		
POM			POM			POM		
P1D1S6.503NOEA4	1	P1D2S6.506NOEA4	P1C1S0801NO3A2	1	P1C2S0802NO3A2	P1C1S0801NO3S2	1	P1C2S0802NO3S2
P1D1S6.503NCEA4	2	P1D2S6.506NCEA4	P1C1S0801NC3A2	2	P1C2S0802NC3A2	P1C1S0801NC3S2	2	P1C2S0802NC3S2
P1D1S6.503POEA4	3	P1D2S6.506POEA4	P1C1S0801PO3A2	3	P1C2S0802PO3A2	P1C1S0801PO3S2	3	P1C2S0802PO3S2
P1D1S6.503PCEA4	4	P1D2S6.506PCEA4	P1C1S0801PC3A2	4	P1C2S0802PC3A2	P1C1S0801PC3S2	4	P1C2S0802PC3S2
			P1C1S0801PS4A2	6	P1C2S0802PS4A2			
			P1C1S0801NS4A2	5	P1C2S0802NS4A2			
			P4C1S0801CO2A2	7	P4C2S0802CO2A2			
			P4C1S0801CC2A2	8	P4C2S0802CC2A2			
			P3C1S0801NO3A2	1	P3C2S0802NO3A2			
			P3C1S0801NC3A2	2	P3C2S0802NC3A2			
			P3C1S0801PO3A2	3	P3C2S0802PO3A2			
			P3C1S0801PC3A2	4	P3C2S0802PC3A2			
			P2C1S0801NO3A2	1	P2C2S0802NO3A2	P2C1S0801NO3S2	1	P2C2S0802NO3S2
			P2C1S0801NC3A2	2	P2C2S0802NC3A2	P2C1S0801NC3S2	2	P2C2S0802NC3S2
			P2C1S0801PO3A2	3	P2C2S0802PO3A2	P2C1S0801PO3S2	3	P2C2S0802PO3S2
			P2C1S0801PC3A2	4	P2C2S0802PC3A2	P2C1S0801PC3S2	4	P2C2S0802PC3S2
			P2C1S0801PS4A2	6	P2C2S0802PS4A2			
			P2C1S0801NS4A2	5	P2C2S0802NS4A2			

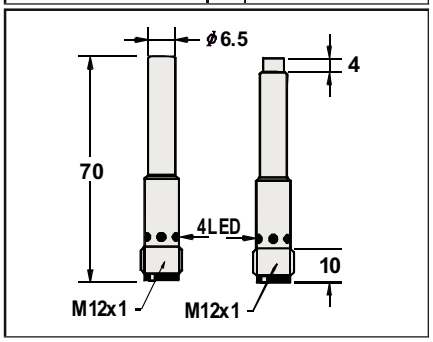

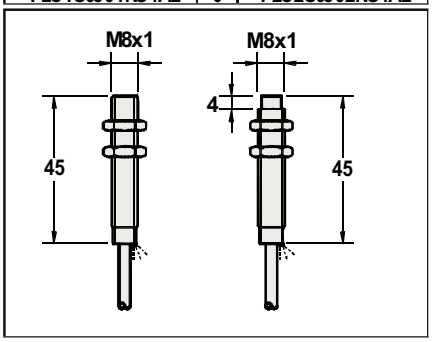

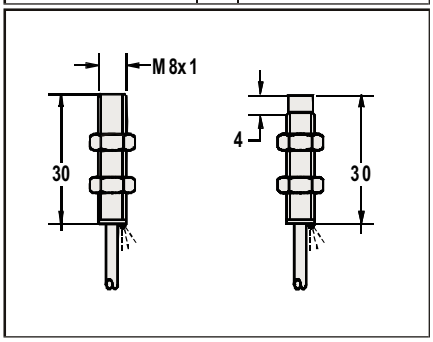

	3ϕ3x0.15 or 3ϕ4x0.15	3ϕ3x0.15
approx.25 g	Approx.40 g	Approx.47 g

DC INDUCTIVE PROXIMITY SWITCH

Diameter	M 8		M 8	
● Shielded ○ Non-Shielded	●	○	●	○
Switching Distance, Sn: mm	1mm	2mm	1mm	2mm
Housing Material	stainless steel		stainless steel or nickel plated brass	
● With LED ○ Without LED	●		●	

Picture

Operating Voltage	10-30VDC / 5-36VDC /10-55V/ 10-60VDC			10-30VDC / 5-36VDC /10-55V/ 10-60VDC		
Ripple	<10%			<10%		
No Load Current	<10mA			<10mA		
Max. Load Current	200mA			200mA		
Leakge Current	<0.01mA			<0.01mA		
Voltage Drop	<1.5V			<1.5V		
Switching Frequency	2KHZ			2KHZ		
Response Time	0.1ms/0.1ms			0.1ms/0.1ms		
Switching Hysteresis	<15%(Sr)			<15%(Sr)		
Repeat Accuracy	<1.0%(Sr)			<1.0%(Sr)		
Protection Category	IP67			IP67		
Operating Temperature	-25℃ - +70℃			-25℃ - +70℃		
Temperature Drift	<10%(Sr)			<10%(Sr)		
Short Circuit Protection	YES			YES		
Overload Trip Point	220mA			220mA		
Material Active Face	POM			POM		
DC 3 wire 10-30V NPN N.O.	P1C1S0801NOPA3	1	P1C2S0802NOPA3	P1C1S0801NOEA4	1	P1C2S0802NOEA4
DC 3 wire 10-30V NPN N.C.	P1C1S0801NCPA3	2	P1C2S0802NCPA3	P1C1S0801NCEA4	2	P1C2S0802NCEA4
DC 3 wire 10-30V PNP N.O.	P1C1S0801POPA3	3	P1C2S0802POPA3	P1C1S0801POEA4	3	P1C2S0802POEA4
DC 3 wire 10-30V PNP N.C.	P1C1S0801PCPA3	4	P1C2S0802PCPA3	P1C1S0801PCEA4	4	P1C2S0802PCEA4
DC 4 wire 10-30V Changeover PNP (N.O. & N.C.)	P1C1S0801PSPA4	6	P1C2S0802PSPA4	P1C1S0801PSEA4	6	P1C2S0802PSEA4
DC 4 wire 10-30V Changeover NPN (N.O. & N.C.)	P1C1S0801NSPA4	5	P1C2S0802NSPA4	P1C1S0801NSEA4	5	P1C2S0802NSEA4
DC 2 wire 10-60V N.O. *	P4C1S0801COPA3	7	P4C2S0802COPA3	P4C1S0801COEA4	7	P4C2S0802COEA4
DC 2 wire 10-60V N.C. *	P4C1S0801CCPA3	8	P4C2S0802CCPA3	P4C1S0801CCEA4	8	P4C2S0802CCEA4
DC 3 wire 10-55v NPN N.O.	P3C1S0801NOPA3	1	P3C2S0802NOPA3	P3C1S0801NOEA4	1	P3C2S0802NOEA4
DC 3 wire 10-55v NPN N.C.	P3C1S0801NCPA3	2	P3C2S0802NCPA3	P3C1S0801NCEA4	2	P3C2S0802NCEA4
DC 3 wire 10-55v PNP N.O.	P3C1S0801POPA3	3	P3C2S0802POPA3	P3C1S0801POEA4	3	P3C2S0802POEA4
DC 3 wire 10-55v PNP N.C.	P3C1S0801PCPA3	4	P3C2S0802PCPA3	P3C1S0801PCEA4	4	P3C2S0802PCEA4
DC 3 wire 5-36V NPN N.O.	P2C1S0801NOPA3	1	P2C2S0802NOPA3	P2C1S0801NOEA4	1	P2C2S0802NOEA4
DC 3 wire 5-36V NPN N.C.	P2C1S0801NCPA3	2	P2C2S0802NCPA3	P2C1S0801NCEA4	2	P2C2S0802NCEA4
DC 3 wire 5-36V PNP N.O.	P2C1S0801POPA3	3	P2C2S0802POPA3	P2C1S0801POEA4	3	P2C2S0802POEA4
DC 3 wire 5-36V PNP N.C.	P2C1S0801PCPA3	4	P2C2S0802PCPA3	P2C1S0801PCEA4	4	P2C2S0802PCEA4
DC 4 wire 5-36V Changeover PNP (N.O & N.C.)	P2C1S0801PSPA4	6	P2C2S0802PSPA4	P2C1S0801PSEA4	6	P2C2S0802PSEA4
DC 4 wire 5-36V Changeover NPN (N.O & N.C.)	P2C1S0801NSPA4	5	P2C2S0802NSPA4	P2C1S0801NSEA4	5	P2C2S0802NSEA4

Dimensions (unit: mm)

* : DC 2wire 10-60V specifications see page 178. Other is same.

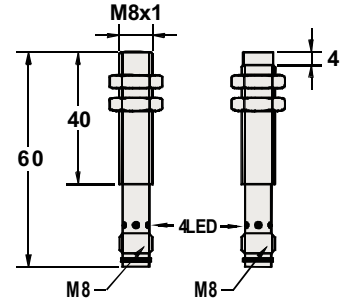

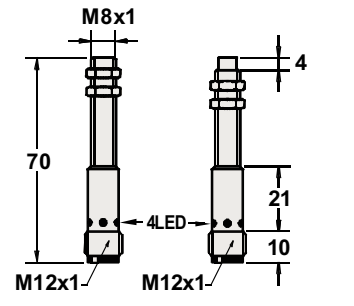

Cable 2M (PVC)		
Weight	Approx.15g	Approx.22g

DC INDUCTIVE PROXIMITY SWITCH

M8	
●	○
1 mm	2 mm
stainless steel	
●	

10-30VDC / 5-36VDC
<10%
<10mA
200mA
<0.01mA
<1.5V
2KHZ
0.1ms/0.1ms
<15%(Sr)
<1.0%(Sr)
IP67
-25℃ - +70℃
<10%(Sr)
YES
220mA
POM

P1C1S0801NOPS3	1	P1C2S0802NOPS3
P1C1S0801NCPS3	2	P1C2S0802NCPS3
P1C1S0801POPS3	3	P1C2S0802POPS3
P1C1S0801PCPS3	4	P1C2S0802PCPS3
P2C1S0801NOPS3	1	P2C2S0802NOPS3
P2C1S0801NCPS3	2	P2C2S0802NCPS3
P2C1S0801POPS3	3	P2C2S0802POPS3
P2C1S0801PCPS3	4	P2C2S0802PCPS3

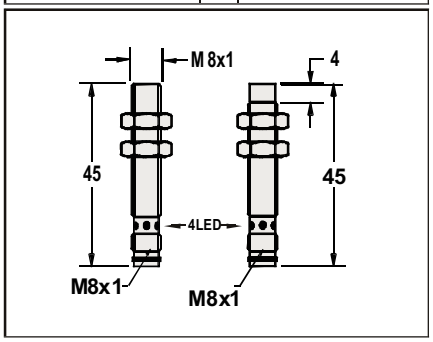

Approx.12g

M8	
●	○
1 mm	2 mm
stainless steel or nickel plated brass	
●	

10-30VDC / 5-36VDC
<10%
<10mA
200mA
<0.01mA
<1.5V
2KHZ
0.1ms/0.1ms
<15%(Sr)
<1.0%(Sr)
IP67
-25℃ - +70℃
<10%(Sr)
YES
220mA
POM

P1C1B0801NOES4	1	P1C2B0802NOES4
P1C1B0801NCES4	2	P1C2B0802NCES4
P1C1B0801POES4	3	P1C2B0802POES4
P1C1B0801PCES4	4	P1C2B0802PCES4
P2C1B0801NOES4	1	P2C2B0802NOES4
P2C1B0801NCES4	2	P2C2B0802NCES4
P2C1B0801POES4	3	P2C2B0802POES4
P2C1B0801PCES4	4	P2C2B0802PCES4

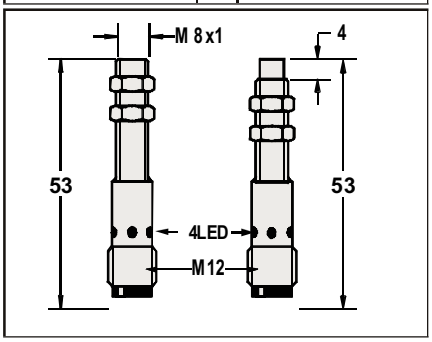

Approx.17 g

M 8	
●	○
2mm	4mm
stainless steel or nickel plated brass	
●	

10-30VDC	
<10%	
<10mA	
200mA	
<0.01mA	
<1.5V	
2KHZ	1KHZ
0.1ms/0.1ms	0.2ms/0.2ms
<15%(Sr)	
<1.0%(Sr)	
IP67	
-25℃ - +70℃	
<10%(Sr)	
YES	
220mA	
POM	

P1C1S0802NO3A2	1	P1C2S0804NO3A2
P1C1S0802NC3A2	2	P1C2S0804NC3A2
P1C1S0802PO3A2	3	P1C2S0804PO3A2
P1C1S0802PC3A2	4	P1C2S0804PC3A2

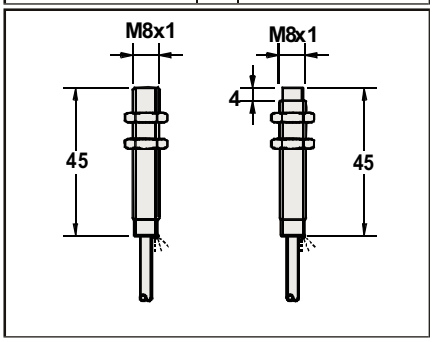

3 Φ 3x0.15 or 3 Φ 4x0.15

Approx.40 g

DC INDUCTIVE PROXIMITY SWITCH

Diameter	M 8		M 8	
● Shielded ○ non-Shielded	●	○	●	○
Switching Distance, Sn: mm	2mm	4mm	2mm	4mm
Housing Material	stainless steel		stainless steel or nickel plated brass	
● With LED ○ Without LED	●		●	
Picture				
Operating Voltage	10-30VDC		10-30VDC	
Ripple	<10%		<10%	
No Load Current	<10mA		<10mA	
Max. Load Current	200mA		200mA	
Leakge Current	<0.01mA		<0.01mA	
Voltage Drop	<1.5V		<1.5V	
Switching Frequency	2KHZ	1KHZ	2KHZ	1KHZ
Response Time	0.1ms/0.1ms	0.2ms/0.2ms	0.1ms/0.1ms	0.2ms/0.2ms
Switching Hysteresis	<15%(Sr)		<15%(Sr)	
Repeat Accuracy	<1.0%(Sr)		<1.0%(Sr)	
Protection Category	IP67		IP67	
Operating Temperature	-25℃ - +70℃		-25℃ - +70℃	
Temperature Drift	<10%(Sr)		<10%(Sr)	
Short Circuit Protection	YES		YES	
Overload Trip Point	220mA		220mA	
Material Active Face	POM		POM	
DC 3 wire 10-30V NPN N.O.	P1C1S0802NOPA3	1	P1C2S0804NOPA3	P1C1B0802NOEA4 1 P1C2B0804NOEA4
DC 3 wire 10-30V NPN N.C.	P1C1S0802NCPA3	2	P1C2S0804NCPA3	P1C1B0802NCEA4 2 P1C2B0804NCEA4
DC 3 wire 10-30V PNP N.O.	P1C1S0802POPA3	3	P1C2S0804POPA3	P1C1B0802POEA4 3 P1C2B0804POEA4
DC 3 wire 10-30V PNP N.C.	P1C1S0802PCPA3	4	P1C2S0804PCPA3	P1C1B0802PCEA4 4 P1C2B0804PCEA4
DC 4 wire 10-30V Changeover PNP (N.O. & N.C.)				
DC 4 wire 10-30V Changeover NPN (N.O. & N.C.)				
DC 2 wire 10-60V N.O.				
DC 2 wire 10-60V N.C.				
DC 3 wire 10-55v NPN N.O.				
DC 3 wire 10-55v NPN N.C.				
DC 3 wire 10-55v PNP N.O.				
DC 3 wire 10-55v PNP N.C.				
DC 3 wire 5-36V NPN N.O.				
DC 3 wire 5-36V NPN N.C.				
DC 3 wire 5-36V PNP N.O.				
DC 3 wire 5-36V PNP N.C.				
DC 4 wire 5-36V Changeover PNP (N.O & N.C.)				
DC 4 wire 5-36V Changeover NPN (N.O & N.C.)				
Dimensions (unit: mm)	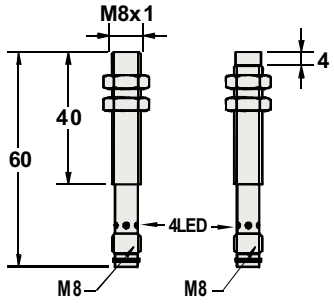		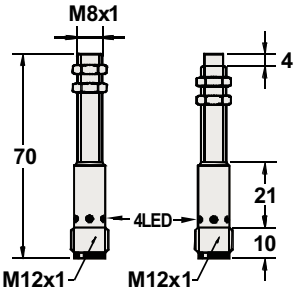	
Cable 2M (PVC)				
Weight	Approx.15g		Approx.22 g	

DC INDUCTIVE PROXIMITY SWITCH

M 8	
●	○
3mm	6mm
stainless steel or nickel plated brass	
●	

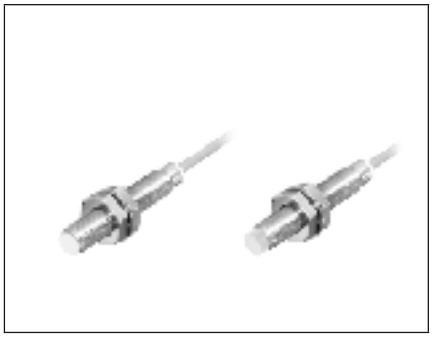

10-30VDC	
<10%	
<10mA	
200mA	
<0.01mA	
<2.0V	
1KHZ	500HZ
0.2ms/0.2ms	0.5ms/0.5ms
<15% (Sr)	
<1.0%(Sr)	
IP67	
-25°C - +70°C	
<10% (Sr)	
YES	
220mA	
POM	

P1C1S0803NO3A2	1	P1C2S0806NO3A2
P1C1S0803NC3A2	2	P1C2S0806NC3A2
P1C1S0803PO3A2	3	P1C2S0806PO3A2
P1C1S0803PC3A2	4	P1C2S0806PC3A2

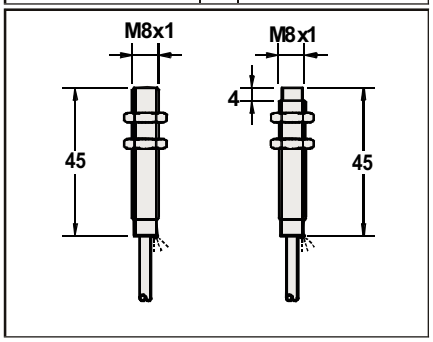

3 ϕ 3x0.15
Approx.40 g

M 8	
●	○
3mm	6mm
stainless steel or nickel plated brass	
●	

10-30VDC	
<10%	
<10mA	
200mA	
<0.01mA	
<2.0V	
1KHZ	500HZ
0.2ms/0.2ms	0.5ms/0.5ms
<15% (Sr)	
<1.0%(Sr)	
IP67	
-25°C - +70°C	
<10% (Sr)	
YES	
220mA	
POM	

P1C1S0803NOPA3	1	P1C2S0806NOPA3
P1C1S0803NCPA3	2	P1C2S0806NCPA3
P1C1S0803POPA3	3	P1C2S0806POPA3
P1C1S0803PCPA3	4	P1C2S0806PCPA3

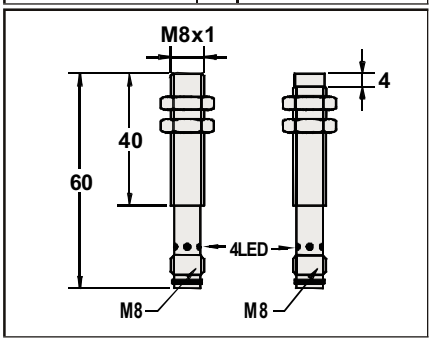

Approx.15 g

M 8	
●	○
3mm	6mm
stainless steel or nickel plated brass	
●	

10-30VDC	
<10%	
<10mA	
200mA	
<0.01mA	
<2.0V	
1KHZ	500HZ
0.2ms/0.2ms	0.5ms/0.5ms
<15% (Sr)	
<1.0%(Sr)	
IP67	
-25°C - +70°C	
<10% (Sr)	
YES	
220mA	
POM	

P1C1B0803NOEA4	1	P1C2B0806NOEA4
P1C1B0803NCEA4	2	P1C2B0806NCEA4
P1C1B0803POEA4	3	P1C2B0806POEA4
P1C1B0803PCEA4	4	P1C2B0806PCEA4

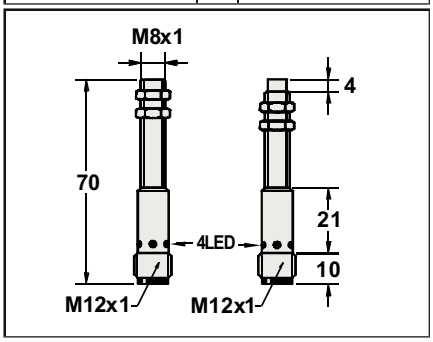

Approx.22 g