MIN Q SERIES MICRO-PROXIMITY SENSOR DC 3-WIRE TYPE

Q8	Q8	Q10
○	○	○
1.5mm	1.5mm	2.0mm
Polycarbonate	Polycarbonate	Polycarbonate
●	●	●
10-30VDC	10-30VDC	10-30VDC
<10%	<10%	<10%
<10mA	<10mA	<10mA
100mA	100mA	100mA
<0.01mA	<0.01mA	<0.01mA
<1.5V	<1.5V	<1.5V
500HZ	500HZ	250HZ
0.5ms/0.5ms	0.5ms/0.5ms	0.5ms/0.5ms
<15%(Sr)	<15%(Sr)	<15%(Sr)
<0.04mm	<0.04mm	<0.04mm
IP67	IP67	IP67
-25°C - +70°C	-25°C - +70°C	-25°C - +70°C
<10%(Sr)	<10%(Sr)	<10%(Sr)
YES	YES	YES
120mA	120mA	120mA
Polycarbonate	Polycarbonate	Polycarbonate
P1S2P881.5NO3B2/F 1	P1S2P881.5NO3B2/T 1	P1S2P1002NO3A2/F 1
P1S2P881.5NC3B2/F 2	P1S2P881.5NC3B2/T 2	P1S2P1002NC3A2/F 2
P1S2P881.5PO3B2/F 3	P1S2P881.5PO3B2/T 3	P1S2P1002PO3A2/F 3
P1S2P881.5PC3B2/F 4	P1S2P881.5PC3B2/T 4	P1S2P1002PC3A2/F 4
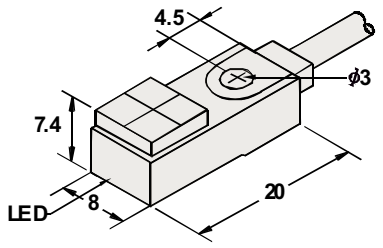	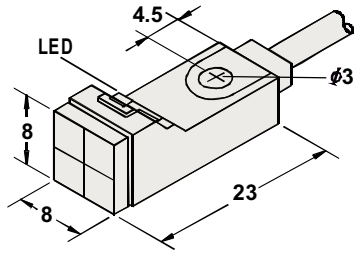	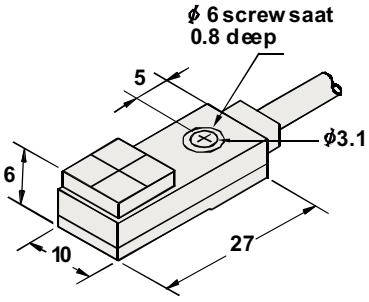
2.7 ϕ 3x0.15 PUR	2.7 ϕ 3x0.15 PUR	2.7 ϕ 3x0.15 PUR
approx.12 g	approx.12 g	approx.20 g

MIN Q SERIES MICRO-PROXIMITY SENSOR DC 3-WIRE TYPE

Diameter	Q12		Q15	
● Shielded ○ non-Shielded	○		○	
Switching Distance, Sn: mm	2mm		4mm	
Housing Material	Polycarbonate		Polycaribonate	
● With LED ○ Without LED	●		●	
Picture				
Operating Voltage	10-30VDC		10-30VDC	
Ripple	<10%		<10%	
No Load Current	<10mA		<10mA	
Max. Load Current	100mA		100mA	
Leakge Current	<0.01mA		<0.01mA	
Voltage Drop	<1.5V		<1.5V	
Switching Frequency	500HZ		250HZ	
Response Time	0.5ms/0.5ms		0.5ms/0.5ms	
Switching Hysteresis	<15%(Sr)		<15%(Sr)	
Repeat Accuracy	<0.04mm		<0.04mm	
Protection Category	IP67		IP67	
Operating Temperature	-25 °C - +70 °C		-25 °C - +70°C	
Temperature Drift	<10%(Sr)		<10%(Sr)	
Short Circuit Protection	YES		YES	
Overload Trip Point	120mA		120mA	
Material Active Face	Polycarbonate		Polycaribonate	
DC 3 wire 10-30V NPN N.O.	P1S2P1202NO3A2/F	1	P1S2P1504NO3A2/F	1
DC 3 wire 10-30V NPN N.C.	P1S2P1202NC3A2/F	2	P1S2P1504NC3A2/F	2
DC 3 wire 10-30V PNP N.O.	P1S2P1202PO3A2/F	3	P1S2P1504PO3A2/F	3
DC 3 wire 10-30V PNP N.C.	P1S2P1202PC3A2/F	4	P1S2P1504PC3A2/F	4
DC 4 wire 10-30V Changeover PNP (N.O. & N.C.)				
DC 4 wire 10-30V Changeover NPN (N.O. & N.C.)				
DC 2 wire 10-60V N.O.				
DC 2 wire 10-60V N.C.				
DC 3 wire 10-55v NPN N.O.				
DC 3 wire 10-55v NPN N.C.				
DC 3 wire 10-55v PNP N.O.				
DC 3 wire 10-55v PNP N.C.				
DC 3 wire 5-36V NPN N.O.				
DC 3 wire 5-36V NPN N.C.				
DC 3 wire 5-36V PNP N.O.				
DC 3 wire 5-36V PNP N.C.				
DC 4 wire 5-36V Changeover PNP (N.O & N.C.)				
DC 4 wire 5-36V Changeover NPN (N.O & N.C.)				
Dimensions (unit: mm)	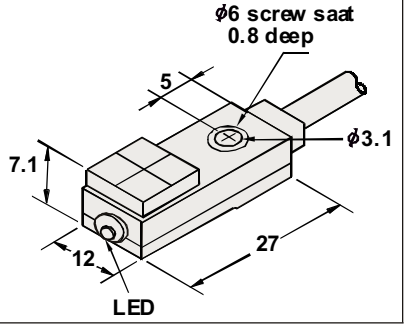		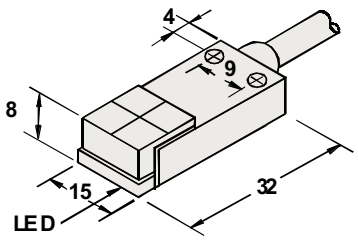	
Cable 2M (PVC)	2.7 ϕ 3x0.15 PUR		3 ϕ3x0.15	
Weight	approx.20 g		approx.20 g	